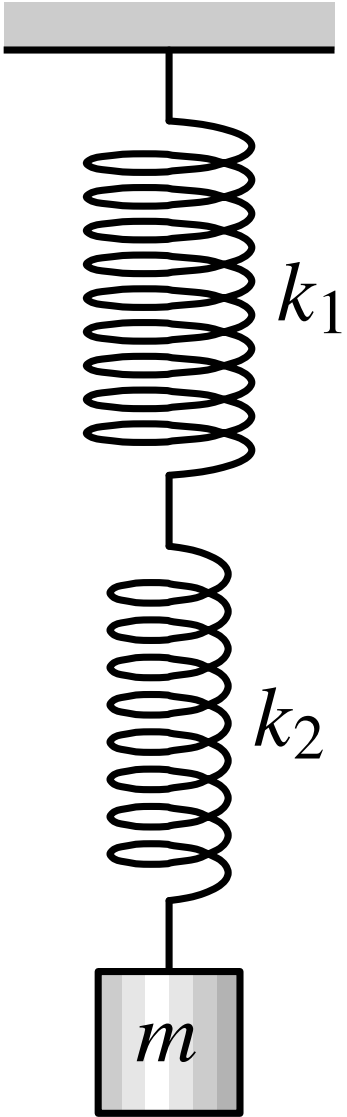
k_1
k_2
m

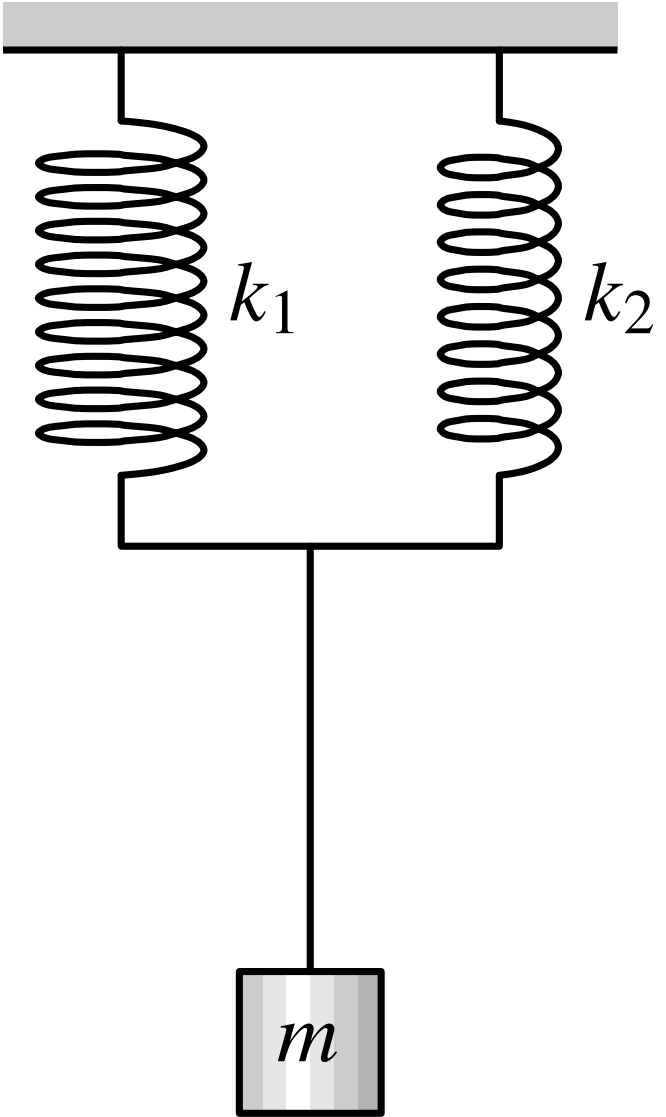
k_1
k_2
m